PanoramAH! AMERICA, LLC

ah!38 SLIDING GLASS DOOR (WZ3)(IMPACT)

GENERAL NOTES:

1. THE PRODUCT SHOWN HEREIN IS DESIGNED AND MANUFACTURED TO COMPLY WITH THE CURRENT EDITION OF THE FLORIDA BUILDING CODE (FBC), **EXCLUDING** HVHZ AND HAS BEEN EVALUATED ACCORDING TO THE FOLLOWING:
   - TAS 201-94
   - TAS 202-94
   - TAS 203-94
2. ADEQUACY OF THE EXISTING STRUCTURAL CONCRETE/MASONRY, 2X FRAMING, AND METAL FRAMING AS A MAIN WIND FORCE RESISTING SYSTEM CAPABLE OF WITHSTANDING AND TRANSFERRING APPLIED PRODUCT LOADS TO THE FOUNDATION IS THE RESPONSIBILITY OF THE ENGINEER OR ARCHITECT OF RECORD FOR THE PROJECT OF INSTALLATION.
3. 1X AND 2X BUCKS (WHEN USED) SHALL BE DESIGNED AND ANCHORED TO PROPERLY TRANSFER ALL LOADS TO THE STRUCTURE. BUCK DESIGN AND INSTALLATION IS THE RESPONSIBILITY OF THE ENGINEER OR ARCHITECT OF RECORD FOR THE PROJECT OF INSTALLATION.
4. THE INSTALLATION DETAILS DESCRIBED HEREIN ARE GENERIC AND MAY NOT REFLECT ACTUAL CONDITIONS FOR A SPECIFIC SITE. IF SITE CONDITIONS CAUSE INSTALLATION TO DEVIATE FROM THE REQUIREMENTS DETAILED HEREIN, A LICENSED ENGINEER OR ARCHITECT SHALL PREPARE SITE SPECIFIC DOCUMENTS FOR USE WITH THIS DOCUMENT.
5. APPROVED IMPACT PROTECTIVE SYSTEM **IS NOT REQUIRED** ON THIS PRODUCT IN AREAS REQUIRING IMPACT RESISTANCE IN WIND ZONE 3 OR LESS.
6. APPROVED IMPACT PROTECTIVE SYSTEM **IS REQUIRED** ON THIS PRODUCT IN AREAS REQUIRING IMPACT RESISTANCE IN WIND ZONE 4.
7. WINDOW FRAME MATERIAL: ALUMINUM 6063-T5
8. GLASS MEETS THE REQUIREMENTS OF ASTM E1300 GLASS CHARTS. SEE SHEET 4 FOR GLAZING DETAIL.

INSTALLATION NOTES:

1. ONE (1) INSTALLATION ANCHOR IS REQUIRED PER TRACK AT EACH ANCHOR LOCATION SHOWN, UNLESS OTHERWISE STATED ON SHEET 3.
2. INSTALL INDIVIDUAL INSTALLATION ANCHORS WITHIN A TOLERANCE OF ±1/2 INCH THE DEPICTED LOCATION & SPACING IN THE ANCHOR LAYOUT DETAILS (I.E., WITHOUT CONSIDERATION OF TOLERANCES). TOLERANCES ARE NOT CUMULATIVE FROM ONE INSTALLATION ANCHOR TO THE NEXT.
3. SHIM AS REQUIRED AT EACH INSTALLATION ANCHOR WITH LOAD BEARING SHIM(S). MAXIMUM ALLOWABLE SHIM STACK TO BE 3/8 INCH. SHIM WHERE SPACE OF 1/16 INCH OR GREATER OCCURS. SHIM(S) SHALL BE CONSTRUCTED OF HIGH DENSITY PLASTIC OR BETTER.
4. MINIMUM EMBEDMENT AND EDGE DISTANCE EXCLUDE WALL FINISHES, INCLUDING BUT NOT LIMITED TO STUCCO, FOAM, BRICK VENEER, AND SIDING.
5. INSTALLATION ANCHORS AND ASSOCIATED HARDWARE MUST BE MADE OF CORROSION RESISTANT MATERIAL OR HAVE A CORROSION RESISTANT COATING.
6. FOR MASONRY OR CONCRETE OPENINGS, A 1X WOOD BUCK MAY BE USED (OPTIONAL) AS LONG AS THE MINIMUM EMBEDMENT AND EDGE DISTANCE REQUIREMENTS ARE STILL MET WITHIN THE CORRESPONDING HOST SUBSTRATE. SEE GENERAL NOTE #3 ON SHEET 1 FOR MORE INFORMATION.
7. FOR HOLLOW BLOCK AND GROUT FILLED BLOCK, DO NOT INSTALL INSTALLATION ANCHORS INTO MORTAR JOINTS. EDGE DISTANCE IS MEASURED FROM FREE EDGE OF BLOCK OR EDGE OF MORTAR JOINT INTO FACE SHELL OF BLOCK.
8. INSTALLATION ANCHORS SHALL BE INSTALLED IN ACCORDANCE WITH ANCHOR MANUFACTURER'S INSTALLATION INSTRUCTIONS, AND ANCHORS SHALL NOT BE USED IN SUBSTRATES WITH STRENGTHS LESS THAN THE MINIMUM STRENGTH SPECIFIED BY THE ANCHOR MANUFACTURER.

TABLE OF CONTENTS

SHEET	SHEET DESCRIPTION
1	GENERAL NOTES AND INSTALLATION NOTES
2	ELEVATION
3	ANCHOR LAYOUT
4	DESIGN PRESSURE TABLE & GLAZING DETAIL
5	VERTICAL SECTIONS
6	HORIZONTAL SECTIONS
7	HORIZONTAL SECTIONS
8	ANCHOR DETAILS & ANCHOR SCHEDULE
9	ANCHOR DETAILS & ANCHOR SCHEDULE

DESIGN PRESSURE RATING (PSF)

WIDTH (IN.)	HEIGHT (IN.)	DESIGN PRESSURE	MISSILE IMPACT RATING
SEE SHEETS 2 AND 4			LARGE & SMALL MISSILE IMPACT

PANORAMAH! unlimited perspective

1000 WOODBURY ROAD, STE. 206
WOODBURY, NY 11797
PH: (631)683-8580

TITLE: *ah!38 SLIDING GLASS DOOR (WZ3)(IMPACT)*

GENERAL NOTES & INSTALLATION NOTES

PREPARED BY:
BUILDING DROPS, INC.
1900 NE MIAMI COURT, STE. 2-15
MIAMI, FL 33132
PH: (954)399-8478
FAX: (954)744.4738
WEB: www.buildingdrops.com
BUILDING DROPS

REMARKS	BY	DATE

THE INSTALLATION DETAILS DESCRIBED HEREIN ARE GENERIC AND MAY NOT REFLECT ACTUAL CONDITIONS FOR A SPECIFIC SITE. IF SITE CONDITIONS CAUSE INSTALLATION TO DEVIATE FROM THE REQUIREMENTS DETAILED HEREIN, A LICENSED ENGINEER OR ARCHITECT SHALL PREPARE SITE SPECIFIC DOCUMENTS FOR USE WITH THIS DOCUMENT.

Digitally signed by Hermes F. Norero, P.E.
Reason: I am approving this document
Date: 2024.10.23 10:43:46 -04'00'

HERMES F. NORERO LICENSE No. 73778 STATE OF FLORIDA PROFESSIONAL ENGINEER

HERMES F. NORERO, P.E.
FLORIDA REG. No. 73778
BUILDING DROPS, INC
1900 NE MIAMI COURT, STE. 2-15
MIAMI, FL 33132
FBPE CERT. OF AUTHORIZATION No. 29578

FL #: FL21091

DATE: 10.16.2024

DWG. BY: SH | CHK. BY: HFN

SCALE: NTS

DWG. #: PAN023

SECTION: 1

10/22/2024 11:37 AM
c:\users\sebastianherreros\building drops, inc\building drops landing - common\projects\panoramah! america llc\fbc-21-0430 - fbc submittal - ph38 pivot sliding door, fl21091\dwgs\sliding glass door\pan023.dwg

NOTE: SEE SHEET 4 FOR DESIGN PRESSURE TABLE.

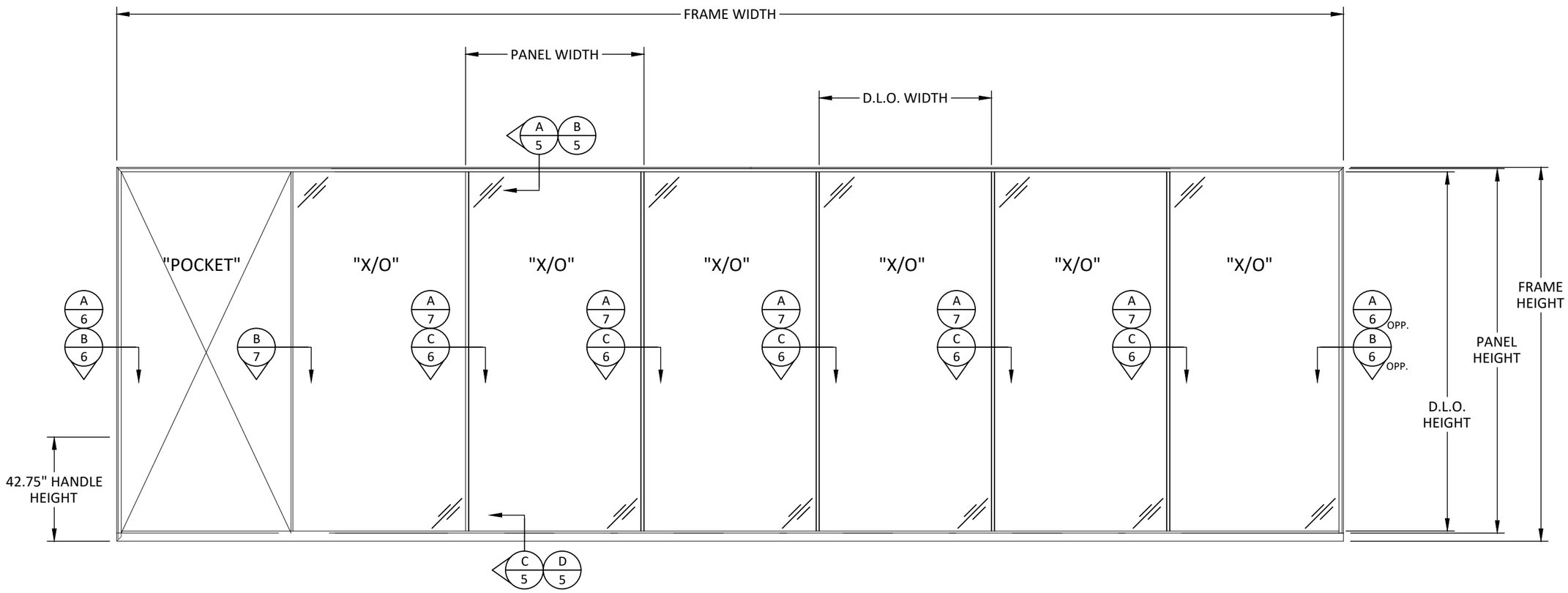

ELEVATION

SLIDING GLASS DOOR

- APPROVED CONFIGURATIONS:
  2 PANEL - OX, XO, XX
  3 PANEL - OOX, XOO, XOX, OXO, XXO, OXX, XXX
  4 PANEL - OXXO, OXXX, XXXO, XXOO, XOOX, OOXX, XXXX
  5 PANEL - XXOOO, OOOXX, XXXXX, OXXXX, XXXXO
  6 PANEL - OXXXXO, OXXXXX, XXXXXX, XXXOOO, OOOXXX, OOXXOOO, XOOOOX, XXXXXO
  7 PANEL - XXXXXXX, OXXXXXX, XXXXXXO, OXXXXXO
  8 PANEL - OXXXXXXO, OXXXXXXX, XXXXXXXO, XXXXXXXX
- POCKETS ARE QUALIFIED ON ANY CONFIGURATION.
- POCKETS ARE QUALIFIED FOR INSTALLATION ON EITHER SIDE OF THE SYSTEM. POCKETS ARE QUALIFIED TO BE USED ON BOTH SIDES AT THE SAME TIME.
- MULTI-TRACK OPTIONS QUALIFIED FOR ALL CONFIGURATIONS ABOVE.

D.L.O. HEIGHT = PANEL HEIGHT - 3.39"
D.L.O. WIDTH = PANEL WIDTH - 2.51"
FRAME HEIGHT = PANEL HEIGHT + 3.09"
NOMINAL FRAME WIDTH = # OF PANELS X PANEL WIDTH

QUALIFIED 90 DEGREE CORNER UNIT

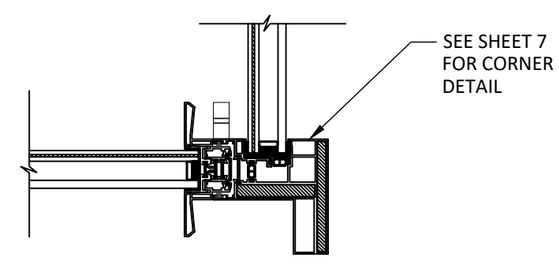

PANORAMAH! unlimited perspective
1000 WOODBURY ROAD, STE. 206
WOODBURY, NY 11797
PH: (631)683-8580

TITLE: *ah!38 SLIDING GLASS DOOR (WZ3)(IMPACT)*

ELEVATION

PREPARED BY:
BUILDING DROPS, INC.
1900 NE MIAMI COURT, STE. 2-15
MIAMI, FL 33132
PH: (954)399-8478
FAX: (954)744.4738
WEB: www.buildingdrops.com

REMARKS	BY	DATE

THE INSTALLATION DETAILS DESCRIBED HEREIN ARE GENERIC AND MAY NOT REFLECT ACTUAL CONDITIONS FOR A SPECIFIC SITE. IF SITE CONDITIONS CAUSE INSTALLATION TO DEVIATE FROM THE REQUIREMENTS DETAILED HEREIN, A LICENSED ENGINEER OR ARCHITECT SHALL PREPARE SITE SPECIFIC DOCUMENTS FOR USE WITH THIS DOCUMENT.

HERMES F. NORERO LICENSE No. 73778 STATE OF FLORIDA PROFESSIONAL ENGINEER

HERMES F. NORERO, P.E.
FLORIDA REG. No. 73778
BUILDING DROPS, INC
1900 NE MIAMI COURT, STE. 2-15
MIAMI, FL 33132
FBPE CERT. OF AUTHORIZATION No. 29578

FL #: FL21091

DATE: 10.16.2024

DWG. BY: SH | CHK. BY: HFN

SCALE: NTS

DWG. #: PAN023

SECTION: 2

10/22/2024 11:37 AM
c:\users\sebastianherreros\building drops, inc\building drops landing - common\projects\panoramah! america llc\fbc-21-0430 - fbc submittal - ph38 pivot sliding door, fl21091\dwgs\sliding glass door\pan023.dwg

10/22/2024 11:37 AM
c:\users\sebastianherreros\building drops, inc\building drops landing - common\projects\panoramah! america llc\fbc-21-0430 - fbc submittal - ph38 pivot sliding door, fl21091\dwgs\sliding glass door\pan023.dwg

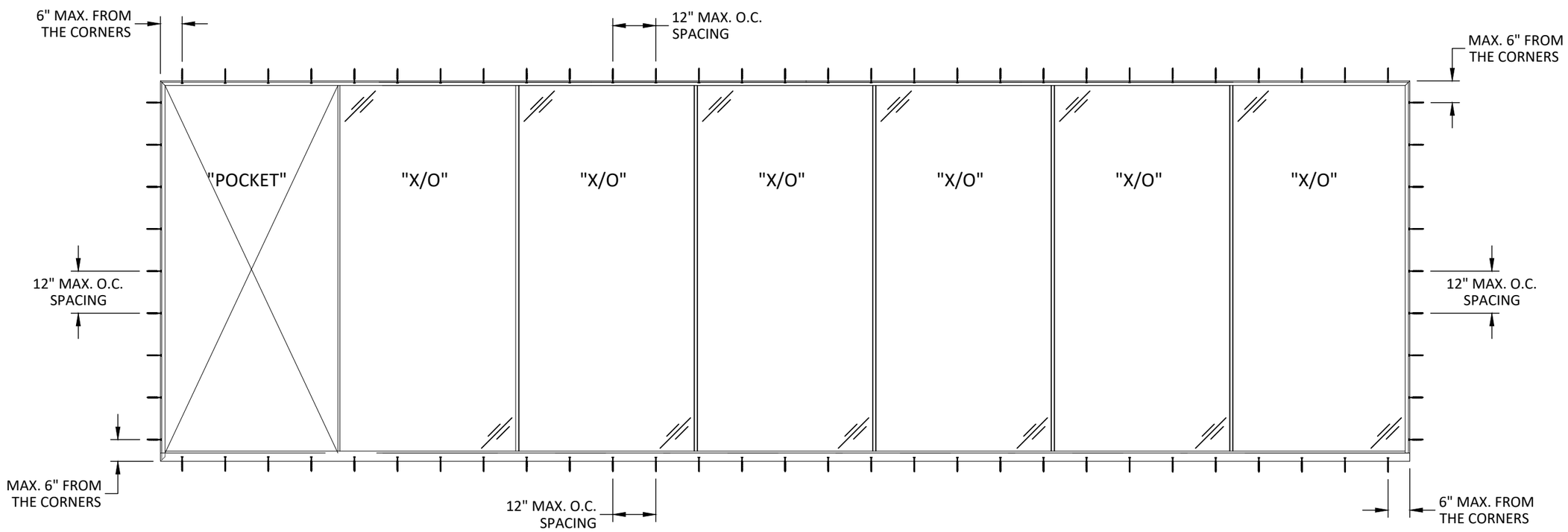

ANCHOR LAYOUT

THROUGH FRAME INSTALLATION

NOTE: ONE (1) ANCHOR PER TRACK.

PANORAMAH!®
unlimited perspective

1000 WOODBURY ROAD, STE. 206
WOODBURY, NY 11797
PH: (631)683-8580

TITLE: *ah!38 SLIDING GLASS DOOR (WZ3)(IMPACT)*

ANCHOR LAYOUT

PREPARED BY:
BUILDING DROPS, INC.
1900 NE MIAMI COURT, STE. 2-15
MIAMI, FL 33132
PH: (954)399-8478
FAX: (954)744.4738
WEB: www.buildingdrops.com
BUILDING DROPS

REMARKS	BY	DATE

THE INSTALLATION DETAILS DESCRIBED HEREIN ARE GENERIC AND MAY NOT REFLECT ACTUAL CONDITIONS FOR A SPECIFIC SITE. IF SITE CONDITIONS CAUSE INSTALLATION TO DEVIATE FROM THE REQUIREMENTS DETAILED HEREIN, A LICENSED ENGINEER OR ARCHITECT SHALL PREPARE SITE SPECIFIC DOCUMENTS FOR USE WITH THIS DOCUMENT.

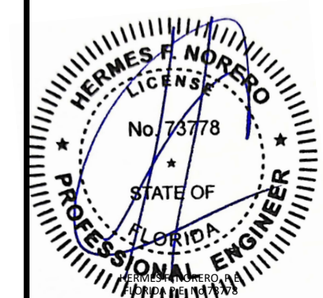

HERMES F. NORERO, P.E.
FLORIDA REG. No. 73778
BUILDING DROPS, INC
1900 NE MIAMI COURT, STE. 2-15
MIAMI, FL 33132
FBPE CERT. OF AUTHORIZATION No. 29578

FL #: FL21091

DATE: 10.16.2024

DWG. BY: SH | CHK. BY: HFN

SCALE: NTS

DWG. #: PAN023

SECTION: 3

OF 9

10/22/2024 11:37 AM
C:\users\sebastianherreros\building drops, inc\building drops landing - common\projects\panoramah! america llc\fbc-21-0430 - fbc submittal - ph38 pivot sliding door, fl21091\dwgs\sliding glass door\pan023.dwg

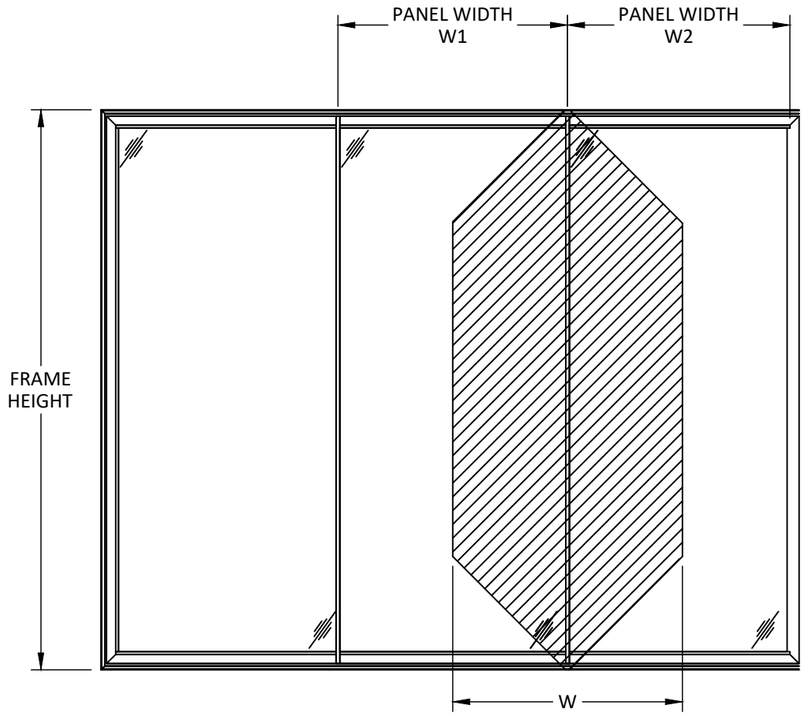

TRIBUTARY WIDTH(W) = (W1+W2)/2

- APPROVED CONFIGURATIONS:
  2 PANEL - OX, XO, XX
  3 PANEL - OOX, XOO, XOX, OXO, XXO, OXX, XXX
  4 PANEL - OXXO, OXXX, XXXO, XXOO, XOOX, OOXX, XXXX
  5 PANEL - XXOOO, OOOXX, XXXXX, OXXXX, XXXXO
  6 PANEL - OXXXXO, OXXXXX, XXXXXX, XXXOOO, OOOXXX, OOXXOOO, XOOOOX, XXXXXO
  7 PANEL - XXXXXXX, OXXXXXX, XXXXXXO, OXXXXXO
  8 PANEL - OXXXXXXO, OXXXXXXX, XXXXXXXO, XXXXXXXX
- POCKETS ARE QUALIFIED ON ANY CONFIGURATION.
- POCKETS ARE QUALIFIED FOR INSTALLATION ON EITHER SIDE OF THE SYSTEM. POCKETS ARE QUALIFIED TO BE USED ON BOTH SIDES AT THE SAME TIME.
- MULTI-TRACK OPTIONS QUALIFIED FOR ALL CONFIGURATIONS ABOVE.

ALLOWABLE DESIGN PRESSURE TABLE (PSF)

FRAME HEIGHT (IN.)	TRIBUTARY WIDTH - W (IN.)											
	36	48	60	72	84	88	96	108	120	132	144	156
84	65.0	65.0	65.0	54.2	50.0	50.0	50.0	50.0	50.0	50.0	50.0	50.0
90	65.0	65.0	65.0	54.2	50.0	50.0	48.9	48.9	48.9	48.9	48.9	-
96	65.0	65.0	65.0	54.2	50.0	50.0	45.8	45.8	45.8	45.8	-	-
102	65.0	65.0	65.0	54.2	50.0	50.0	45.8	43.1	43.1	43.1	-	-
108	65.0	65.0	65.0	54.2	50.0	50.0	45.8	40.7	40.7	-	-	-
114	65.0	65.0	65.0	54.2	50.0	50.0	45.8	40.7	36.7	-	-	-
120	65.0	65.0	65.0	54.2	50.0	50.0	45.8	40.7	-	-	-	-
126	65.0	65.0	65.0	50.0	50.0	50.0	45.8	40.7	-	-	-	-
132	65.0	65.0	65.0	50.0	50.0	50.0	45.8	-	-	-	-	-
138	65.0	65.0	65.0	50.0	50.0	50.0	45.8	-	-	-	-	-
144	65.0	65.0	65.0	50.0	50.0	50.0	-	-	-	-	-	-
150	65.0	65.0	50.0	50.0	50.0	50.0	-	-	-	-	-	-
156	65.0	61.9	50.0	50.0	50.0	50.0	-	-	-	-	-	-
162	65.0	55.1	50.0	50.0	45.8	-	-	-	-	-	-	-
168	64.8	50.0	50.0	46.2	-	-	-	-	-	-	-	-
174	58.2	50.0	48.6	41.4	-	-	-	-	-	-	-	-
180	52.5	50.0	43.8	37.2	-	-	-	-	-	-	-	-
186	50.0	48.7	39.6	33.6	-	-	-	-	-	-	-	-
192	50.0	44.2	35.9	-	-	-	-	-	-	-	-	-

NOTE: TABLE APPLIED TO 90 DEGREE OUTSIDE CORNER AS WELL.

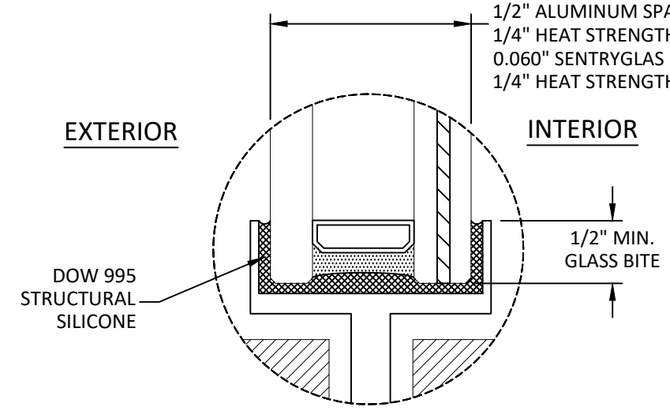

GLAZING DETAIL 1

GLAZING NOTES:
1. GLASS TYPE COMPLIES WITH ASTM E1300 REQUIREMENTS. PER THE FBC TEMPER AND SAFETY GLAZING REQUIREMENTS SHALL BE REVIEWED ON A SITE SPECIFIC BASIS.
2. SETTING BLOCK DUROMETER HARDNESS OF 70-90 (SHORE A) AS REFERENCED IN FBC CHAPTER 24.
3. SETTING BLOCKS TO BE LOCATED AT 1/4 SPAN LENGTH FOR GLASS WIDER THAN 36" AS PER FBC CHAPTER 24.
4. D.L.O. AND DESIGN PRESSURES MAY NOT EXCEED MAX VALUES SHOWN HEREIN.

PANORAMAH!® unlimited perspective
1000 WOODBURY ROAD, STE. 206
WOODBURY, NY 11797
PH: (631)683-8580

TITLE: *ah!38 SLIDING GLASS DOOR (WZ3)(IMPACT)*
DESIGN PRESSURE TABLE & GLAZING DETAIL

PREPARED BY:
BUILDING DROPS, INC.
1900 NE MIAMI COURT, STE. 2-15
MIAMI, FL 33132
PH: (954)399-8478
FAX: (954)744.4738
WEB: www.buildingdrops.com
BUILDING DROPS

REMARKS	BY	DATE

THE INSTALLATION DETAILS DESCRIBED HEREIN ARE GENERIC AND MAY NOT REFLECT ACTUAL CONDITIONS FOR A SPECIFIC SITE. IF SITE CONDITIONS CAUSE INSTALLATION TO DEVIATE FROM THE REQUIREMENTS DETAILED HEREIN, A LICENSED ENGINEER OR ARCHITECT SHALL PREPARE SITE SPECIFIC DOCUMENTS FOR USE WITH THIS DOCUMENT.

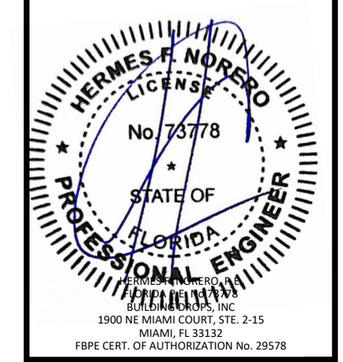

FL #: FL21091
DATE: 10.16.2024
DWG. BY: SH
CHK. BY: HFN
SCALE: NTS
DWG. #: PAN023
SECTION: 4

10/22/2024 11:37 AM
c:\users\sebastianherreros\building drops, inc\building drops landing - common\projects\panoramah! america llc\fbc-21-0430 - fbc submittal - ph38 pivot sliding door, fl21091\dwgs\sliding glass door\pan023.dwg

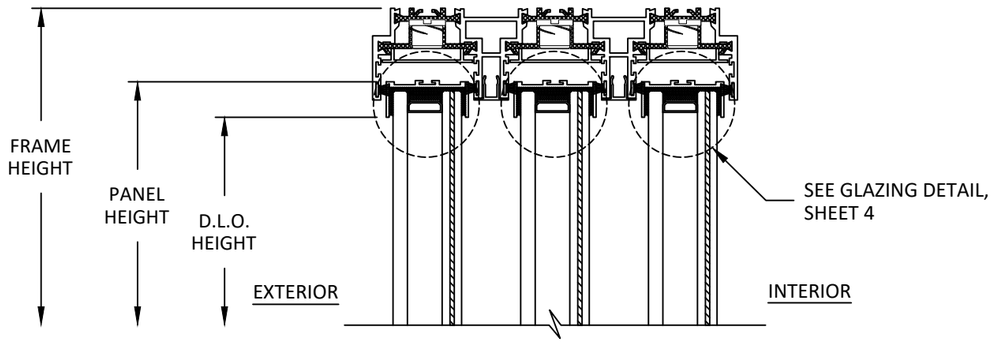

A/5 VERTICAL SECTION
3-TRACK HEAD

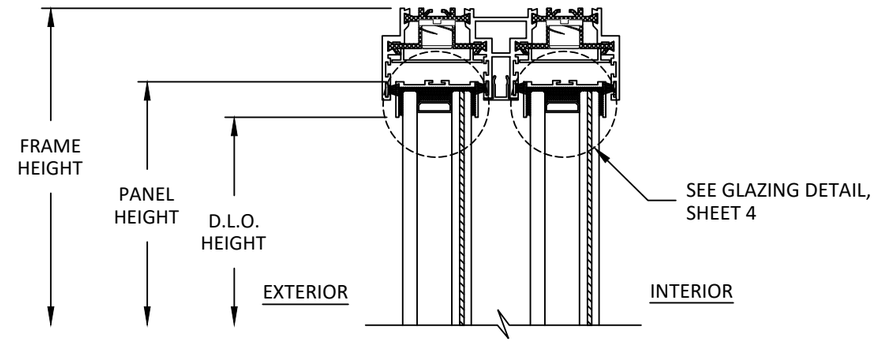

B/5 VERTICAL SECTION
2-TRACK HEAD

NOTE: 2-TRACK AND 3-TRACK DETAILS SHOWN. MULTI-TRACK OPTIONS SIMILAR AND QUALIFIED.

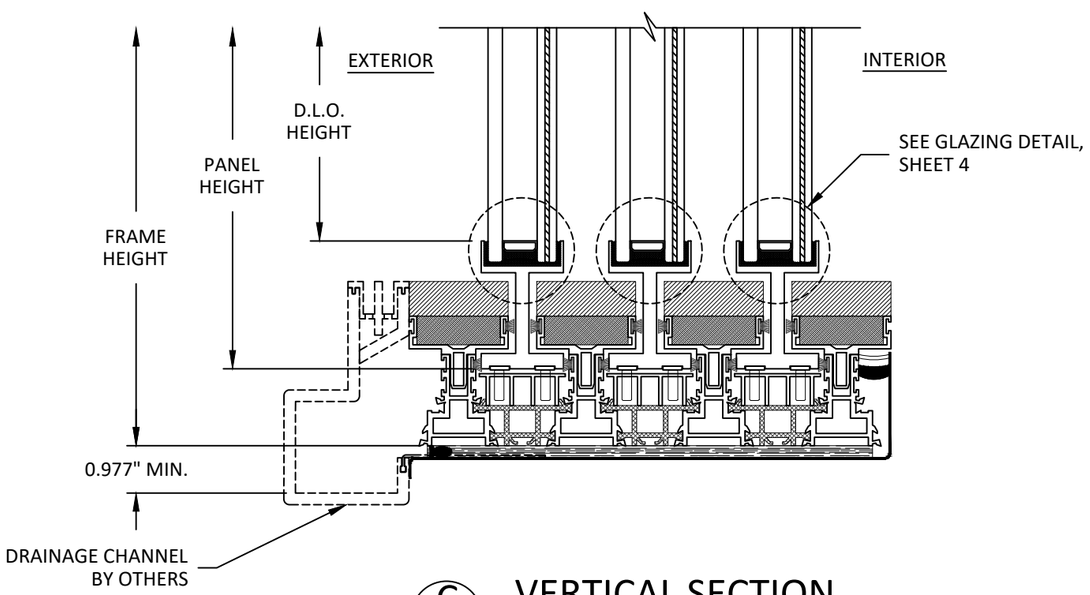

C/5 VERTICAL SECTION
3-TRACK SILL

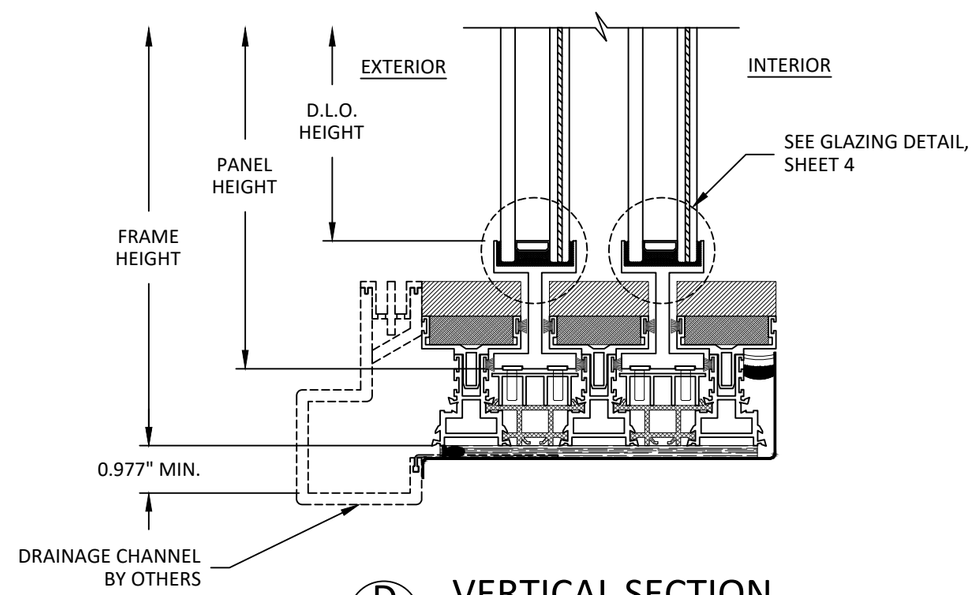

D/5 VERTICAL SECTION
2-TRACK SILL

PANORAMAH!® unlimited perspective
1000 WOODBURY ROAD, STE. 206
WOODBURY, NY 11797
PH: (631)683-8580

TITLE: *ah!38 SLIDING GLASS DOOR (WZ3)(IMPACT)*
VERTICAL SECTIONS

PREPARED BY:
BUILDING DROPS, INC.
1900 NE MIAMI COURT, STE. 2-15
MIAMI, FL 33132
PH: (954)399-8478
FAX: (954)744.4738
WEB: www.buildingdrops.com
BUILDING DROPS

REMARKS	BY	DATE

THE INSTALLATION DETAILS DESCRIBED HEREIN ARE GENERIC AND MAY NOT REFLECT ACTUAL CONDITIONS FOR A SPECIFIC SITE. IF SITE CONDITIONS CAUSE INSTALLATION TO DEVIATE FROM THE REQUIREMENTS DETAILED HEREIN, A LICENSED ENGINEER OR ARCHITECT SHALL PREPARE SITE SPECIFIC DOCUMENTS FOR USE WITH THIS DOCUMENT.

HERMES F. NORERO LICENSE No. 73778 STATE OF FLORIDA PROFESSIONAL ENGINEER

HERMES F. NORERO, P.E.
FLORIDA REG. No. 73778
BUILDING DROPS, INC
1900 NE MIAMI COURT, STE. 2-15
MIAMI, FL 33132
FBPE CERT. OF AUTHORIZATION No. 29578

FL #: FL21091
DATE: 10.16.2024
DWG. BY: SH
CHK. BY: HFN
SCALE: NTS
DWG. #: PAN023
SECTION: 5

10/22/2024 11:37 AM
c:\users\sebastianherreros\building drops, inc\building drops landing - common\projects\panoramah! america llc\fbc-21-0430 - fbc submittal - ph38 pivot sliding door, fl21091\dwgs\sliding glass door\pan023.dwg

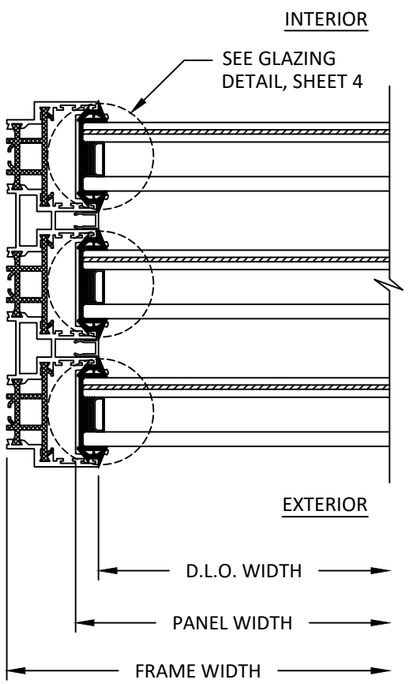

A/6 HORIZONTAL SECTION

3-TRACK JAMB
POCKET JAMB SIMILAR

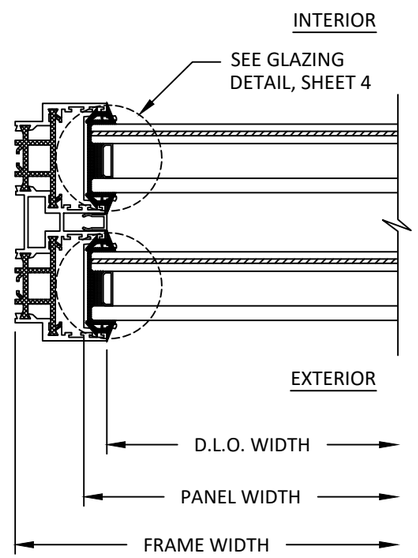

B/6 HORIZONTAL SECTION

2-TRACK JAMB
POCKET JAMB SIMILAR

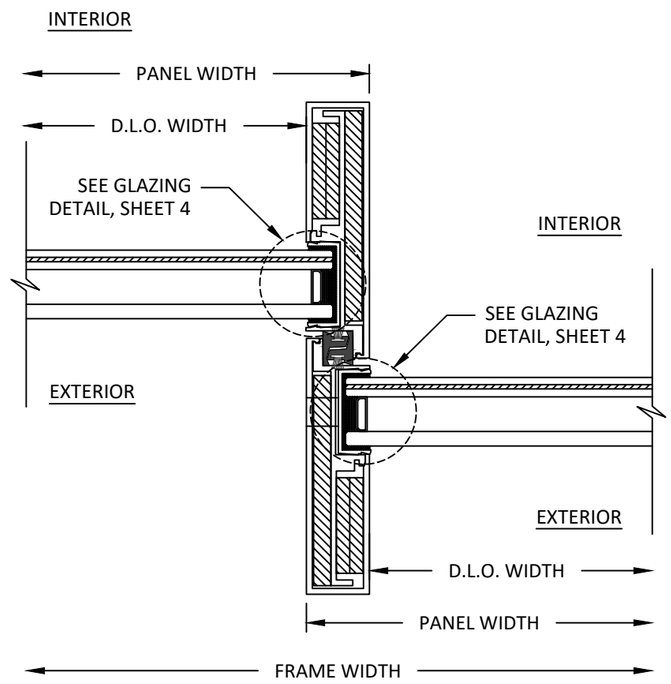

C/6 HORIZONTAL SECTION

INTERLOCK

NOTE: 2-TRACK AND 3-TRACK DETAILS SHOWN. MULTI-TRACK OPTIONS SIMILAR AND QUALIFIED.

PANORAMAH!® unlimited perspective

1000 WOODBURY ROAD, STE. 206
WOODBURY, NY 11797
PH: (631)683-8580

TITLE: *ah!38 SLIDING GLASS DOOR (WZ3)(IMPACT)*

HORIZONTAL SECTIONS

PREPARED BY:
BUILDING DROPS, INC.
1900 NE MIAMI COURT, STE. 2-15
MIAMI, FL 33132
PH: (954)399-8478
FAX: (954)744.4738
WEB: www.buildingdrops.com
BUILDING DROPS

REMARKS	BY	DATE

THE INSTALLATION DETAILS DESCRIBED HEREIN ARE GENERIC AND MAY NOT REFLECT ACTUAL CONDITIONS FOR A SPECIFIC SITE. IF SITE CONDITIONS CAUSE INSTALLATION TO DEVIATE FROM THE REQUIREMENTS DETAILED HEREIN, A LICENSED ENGINEER OR ARCHITECT SHALL PREPARE SITE SPECIFIC DOCUMENTS FOR USE WITH THIS DOCUMENT.

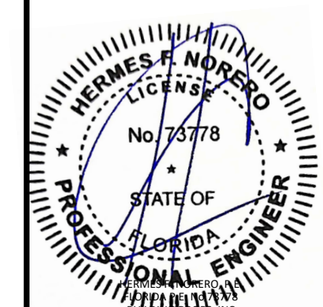

HERMES F. NORERO, P.E.
FLORIDA REG. No. 73778
BUILDING DROPS, INC
1900 NE MIAMI COURT, STE. 2-15
MIAMI, FL 33132
FBPE CERT. OF AUTHORIZATION No. 29578

FL #: FL21091

DATE: 10.16.2024

DWG. BY: SH | CHK. BY: HFN

SCALE: NTS

DWG. #: PAN023

SECTION: 6

10/22/2024 11:37 AM
c:\users\sebastianherreros\building drops, inc\building drops landing - common\projects\panoramah! america llc\fbc-21-0430 - fbc submittal - ph38 pivot sliding door, fl21091\dwgs\sliding glass door\pan023.dwg

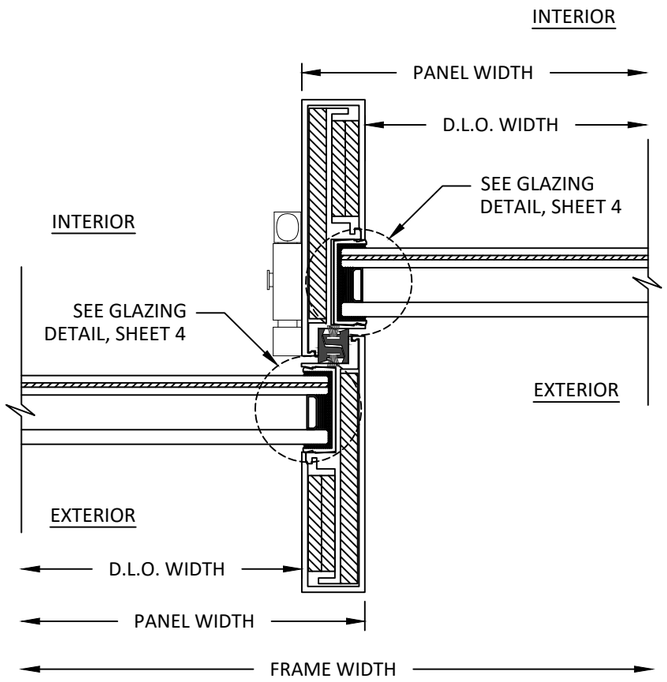

A 7 HORIZONTAL SECTION
BI-PARTING STILE

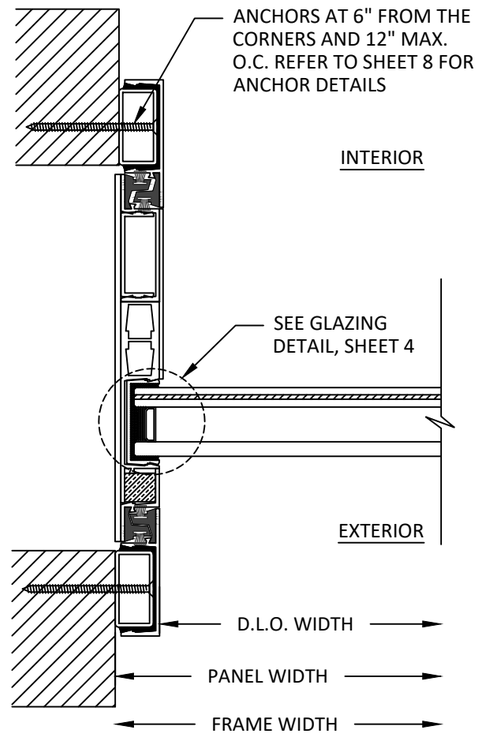

B 7 HORIZONTAL SECTION
POCKET INTERLOCK

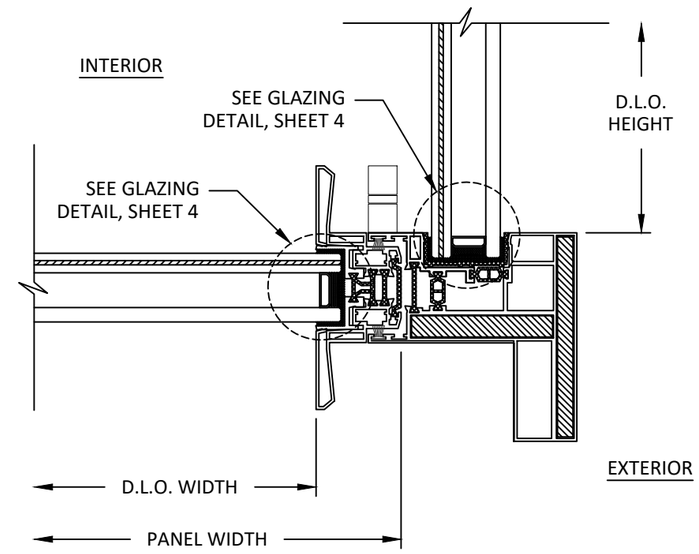

C 7 HORIZONTAL SECTION
90 DEGREE OUTSIDE CORNER

PANORAMAH!®
unlimited perspective
1000 WOODBURY ROAD, STE. 206
WOODBURY, NY 11797
PH: (631)683-8580

TITLE: *ah!38 SLIDING GLASS DOOR (WZ3)(IMPACT)*

HORIZONTAL SECTIONS

PREPARED BY:
BUILDING DROPS, INC.
1900 NE MIAMI COURT, STE. 2-15
MIAMI, FL 33132
PH: (954)399-8478
FAX: (954)744.4738
WEB: www.buildingdrops.com
BUILDING DROPS

REMARKS	BY	DATE

THE INSTALLATION DETAILS DESCRIBED HEREIN ARE GENERIC AND MAY NOT REFLECT ACTUAL CONDITIONS FOR A SPECIFIC SITE. IF SITE CONDITIONS CAUSE INSTALLATION TO DEVIATE FROM THE REQUIREMENTS DETAILED HEREIN, A LICENSED ENGINEER OR ARCHITECT SHALL PREPARE SITE SPECIFIC DOCUMENTS FOR USE WITH THIS DOCUMENT.

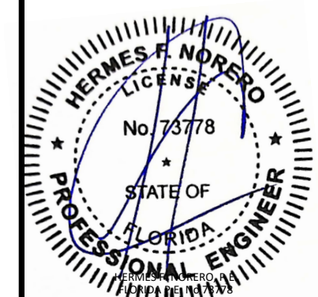

HERMES F. NORERO, P.E.
FLORIDA REG. No. 73778
BUILDING DROPS, INC
1900 NE MIAMI COURT, STE. 2-15
MIAMI, FL 33132
FBPE CERT. OF AUTHORIZATION No. 29578

FL #: FL21091

DATE: 10.16.2024

DWG. BY: SH | CHK. BY: HFN

SCALE: NTS

DWG. #: PAN023

SECTION: 7

10/22/2024 11:37 AM
c:\users\sebastianherreros\building.drops.inc\building.drops.landing - common\projects\panoramah! america llc\fbc-21-0430 - fbc submittal - ph38 pivot sliding door, fl21091\dwgs\sliding glass door\pan023.dwg

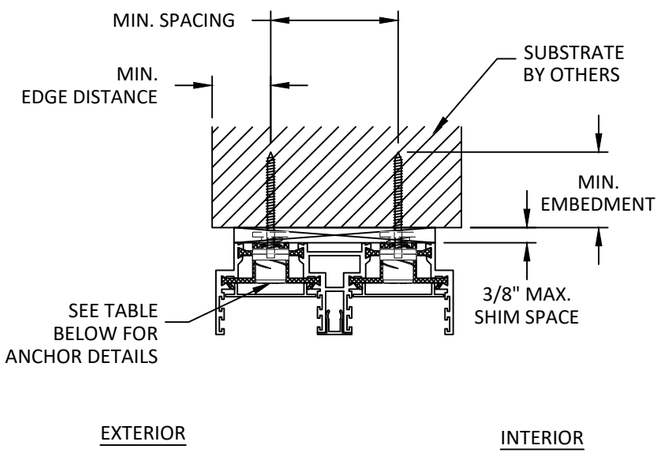

A/8 VERTICAL SECTION

2-TRACK HEAD
THROUGH FRAME

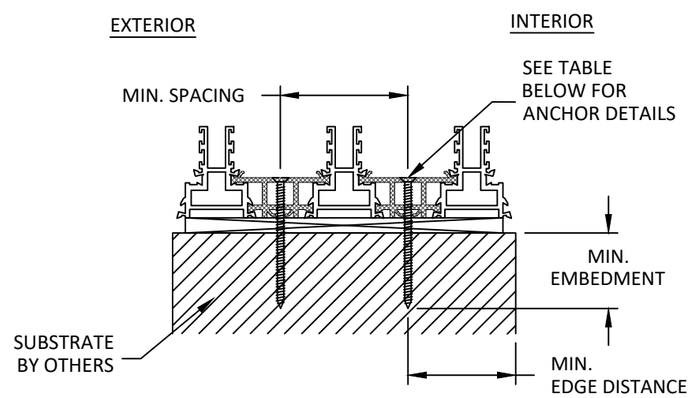

B/8 VERTICAL SECTION

2-TRACK SILL
THROUGH FRAME

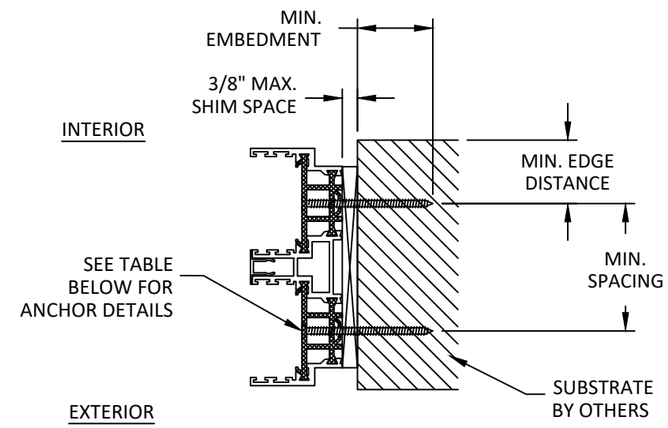

C/8 HORIZONTAL SECTION

2-TRACK JAMB
THROUGH FRAME

ANCHOR SCHEDULE					
METHOD	SUBSTRATE	ANCHOR SCHEDULE	MIN. EMBEDMENT	MIN. EDGE DISTANCE	MIN. SPACING
THROUGH FRAME	WOOD: MIN. SG = 0.55	#14 WOOD SCREW	1.50"	0.75"	2.625"
	METAL: 18 GAUGE STEEL, MIN. Fy = 33KSI ALUMINUM: 1/8" MIN., 6063-T5	1/4" SELF-DRILLING SCREW	3 THREADS MIN PENETRATION BEYOND STRUCTURE	0.50"	
	CONCRETE: f'c=3000PSI	1/4" ITW TAPCON	1.50"	2.50"	
	MASONRY: CMU per ASTM C90 MIN. 2000 PSI	1/4" ITW TAPCON	1.00"	2.50"	

PANORAMAH!®
unlimited perspective
1000 WOODBURY ROAD, STE. 206
WOODBURY, NY 11797
PH: (631)683-8580

TITLE: *ah!38 SLIDING GLASS DOOR (WZ3)(IMPACT)*

ANCHOR DETAILS & ANCHOR SCHEDULE

PREPARED BY:
BUILDING DROPS, INC.
1900 NE MIAMI COURT, STE. 2-15
MIAMI, FL 33132
PH: (954)399-8478
FAX: (954)744.4738
WEB: www.buildingdrops.com
BUILDING DROPS

REMARKS	BY	DATE

THE INSTALLATION DETAILS DESCRIBED HEREIN ARE GENERIC AND MAY NOT REFLECT ACTUAL CONDITIONS FOR A SPECIFIC SITE. IF SITE CONDITIONS CAUSE INSTALLATION TO DEVIATE FROM THE REQUIREMENTS DETAILED HEREIN, A LICENSED ENGINEER OR ARCHITECT SHALL PREPARE SITE SPECIFIC DOCUMENTS FOR USE WITH THIS DOCUMENT.

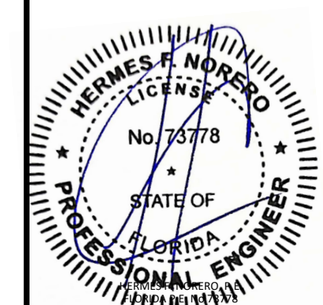

HERMES F. NORERO, P.E.
FLORIDA REG. No. 73778
BUILDING DROPS, INC
1900 NE MIAMI COURT, STE. 2-15
MIAMI, FL 33132
FBPE CERT. OF AUTHORIZATION No. 29578

FL #: FL21091

DATE: 10.16.2024

DWG. BY: SH | CHK. BY: HFN

SCALE: NTS

DWG. #: PAN023

SECTION: 8

10/22/2024 11:37 AM
c:\users\sebastianherreros\building.drops.inc\building.drops.landing - common\projects\panoramah! america llc\fbc-21-0430 - fbc submittal - ph38 pivot sliding door, f121091\dwgs\sliding glass door\pan023.dwg

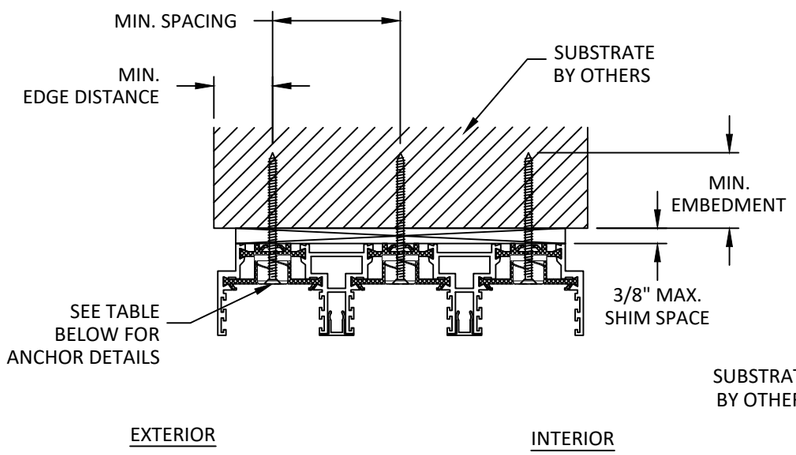

A/9 VERTICAL SECTION
3-TRACK HEAD THROUGH FRAME

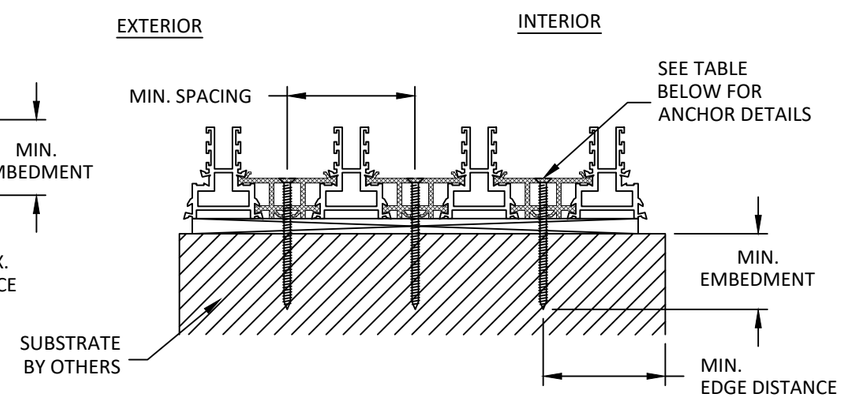

B/9 VERTICAL SECTION
3-TRACK SILL THROUGH FRAME

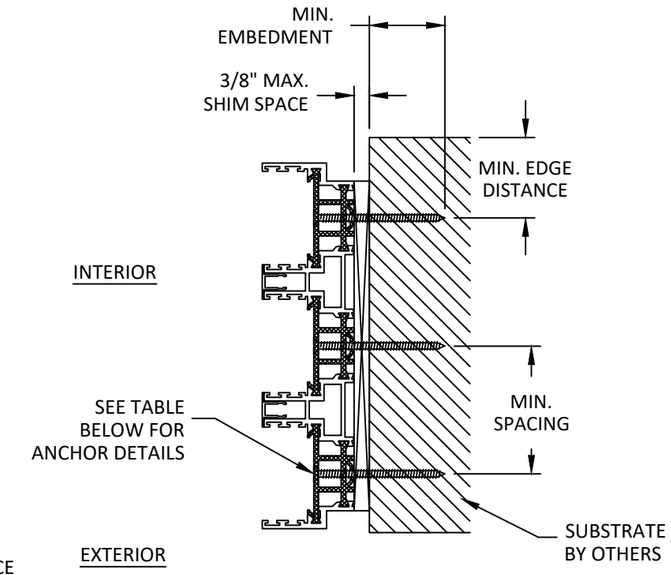

C/9 HORIZONTAL SECTION
3-TRACK JAMB THROUGH FRAME

ANCHOR SCHEDULE

METHOD	SUBSTRATE	ANCHOR SCHEDULE	MIN. EMBEDMENT	MIN. EDGE DISTANCE	MIN. SPACING
THROUGH FRAME	WOOD: MIN. SG = 0.55	#14 WOOD SCREW	1.50"	0.75"	2.625"
	METAL: 18 GAUGE STEEL, MIN. Fy = 33KSI ALUMINUM: 1/8" MIN., 6063-T5	1/4" SELF-DRILLING SCREW	3 THREADS MIN PENETRATION BEYOND STRUCTURE	0.50"	
	CONCRETE: f'c=3000PSI	1/4" ITW TAPCON	1.50"	2.50"	
	MASONRY: CMU per ASTM C90 MIN. 2000 PSI	1/4" ITW TAPCON	1.00"	2.50"	

PANORAMAH!® unlimited perspective
1000 WOODBURY ROAD, STE. 206
WOODBURY, NY 11797
PH: (631)683-8580

TITLE: *ah!38 SLIDING GLASS DOOR (WZ3)(IMPACT)*
ANCHOR DETAILS & ANCHOR SCHEDULE

PREPARED BY:
BUILDING DROPS, INC.
1900 NE MIAMI COURT, STE. 2-15
MIAMI, FL 33132
PH: (954)399-8478
FAX: (954)744.4738
WEB: www.buildingdrops.com
BUILDING DROPS

REMARKS	BY	DATE

THE INSTALLATION DETAILS DESCRIBED HEREIN ARE GENERIC AND MAY NOT REFLECT ACTUAL CONDITIONS FOR A SPECIFIC SITE. IF SITE CONDITIONS CAUSE INSTALLATION TO DEVIATE FROM THE REQUIREMENTS DETAILED HEREIN, A LICENSED ENGINEER OR ARCHITECT SHALL PREPARE SITE SPECIFIC DOCUMENTS FOR USE WITH THIS DOCUMENT.

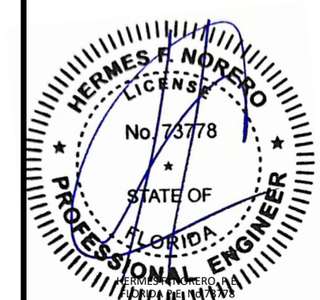

HERMES F. NORERO, P.E.
FLORIDA REG. No. 73778
BUILDING DROPS, INC
1900 NE MIAMI COURT, STE. 2-15
MIAMI, FL 33132
FBPE CERT. OF AUTHORIZATION No. 29578

FL #: FL21091
DATE: 10.16.2024
DWG. BY: SH
CHK. BY: HFN
SCALE: NTS
DWG. #: PAN023
SECTION: 9
OF 9